# Technical data sheet

Product features

| Hot dog machine 3 spike 230 V / 1N | | |
|---|---|---|
| **Model** | **SAP Code** | 00001449 |
| HD 03 | **A group of articles - web** | Sausage warmers |




- Material: Aluminium
- Indicators: operation and warm-up
- Maximum device temperature [°C]: 100

| | | | |
|---|---|---|---|
| **SAP Code** | 00001449 | **Net Weight [kg]** | 2.50 |
| **Net Width [mm]** | 210 | **Power electric [kW]** | 0.100 |
| **Net Depth [mm]** | 219 | **Loading** | 230 V / 1N - 50 Hz |
| **Net Height [mm]** | 241 | **Maximum device temperature [°C]** | 100 |



RM GASTRO, s.r.o.,
Třída Čs. armády 816,
391 81 Veselí nad Lužnicí 1, ID:49825062

# Technical data sheet

Technical drawing

| Hot dog machine 3 spike 230 V / 1N | | |
|---|---|---|
| **Model** | **SAP Code** | 00001449 |
| HD 03 | **A group of articles - web** | Sausage warmers |

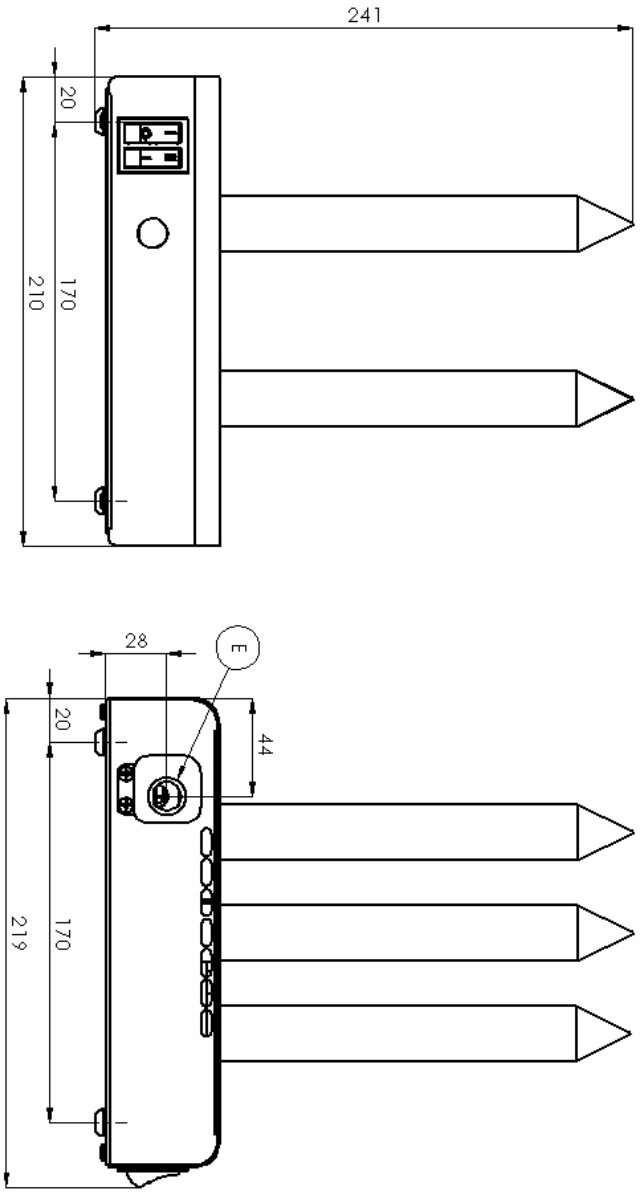




RM GASTRO, s.r.o.,
Třída Čs. armády 816,
391 81 Veselí nad Lužnicí 1, ID:49825062

# Technical data sheet

Product benefits

| Hot dog machine 3 spike 230 V / 1N | | |
|---|---|---|
| **Model** | **SAP Code** | 00001449 |
| HD 03 | **A group of articles - web** | Sausage warmers |

**1** **All-stainless design**

only stainless steel intended for food contact is used

- absolutely rust-proof and non-magnetic design resists even weak acids easier compliance with hygiene standards (HACCP); easy maintenance and cleaning

**2** **Run and warm-up light**

optical possibility to check the status of the device

- the operator immediately knows what state the appliance is in on/off, heating/not heating

**3** **Heating mandrels made of brushed aluminum**

non-stick heat-conducting surface

- quick heating of the mandrel and unbroken pastry

**4** **Separate control for each drive delete completely**

I can control both parts of the Hot Dog independently

- better controllability and energy saving

**5** **Power switch**

standard mode and rapid heating mode

- possibility of faster heating up
- possibility to regulate the heating temperature



RM GASTRO, s.r.o.,
Třída Čs. armády 816,
391 81 Veselí nad Lužnicí 1, ID:49825062

# Technical data sheet

Technical parameters

| Hot dog machine 3 spike 230 V / 1N | | |
|---|---|---|
| **Model** | **SAP Code** | 00001449 |
| HD 03 | **A group of articles - web** | Sausage warmers |

1. **SAP Code:**
   00001449
2. **Net Width [mm]:**
   210
3. **Net Depth [mm]:**
   219
4. **Net Height [mm]:**
   241
5. **Net Weight [kg]:**
   2.50
6. **Gross Width [mm]:**
   230
7. **Gross depth [mm]:**
   230
8. **Gross Height [mm]:**
   290
9. **Gross Weight [kg]:**
   2.90
10. **Device type:**
    Electric unit
11. **Construction type of device:**
    Table top
12. **Material:**
    Aluminium
13. **Power electric [kW]:**
    0.100
14. **Loading:**
    230 V / 1N - 50 Hz
15. **Maximum device temperature [°C]:**
    100
16. **Protection of controls:**
    IPX4
17. **Energy Saving system:**
    Energy saving mode
18. **Indicators:**
    operation and warm-up
19. **Cross-section of conductors CU [mm²]:**
    0,5



RM GASTRO, s.r.o.,
Třída Čs. armády 816,
391 81 Veselí nad Lužnicí 1, ID:49825062